PowerAmerica Funded Member Projects Summary Slides

Performance Period June 2016-June 2017

Virginia Tech-CPES (Partner: ABB Inc.)

Project Title: Electromagnetic Interference (EMI) Mitigation and Containment in SiC-Based Modular UPS for Commercial Applications

Objectives: Develop EMI filter and mitigation and containment strategy for SiC-based UPS

Major Milestones: Demonstration of EMI filter for SiC-based UPS; mitigation and containment EMI strategy for SiC-based converter

Significant Equipment Acquisition: None

Deliverables: EMI filter, EMI design strategy for SiC-based converters

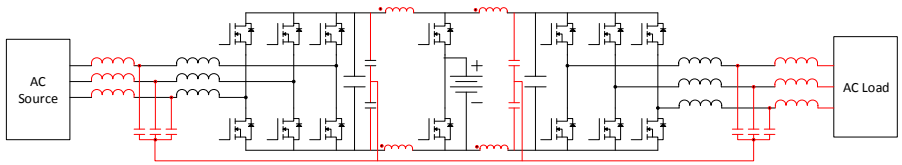

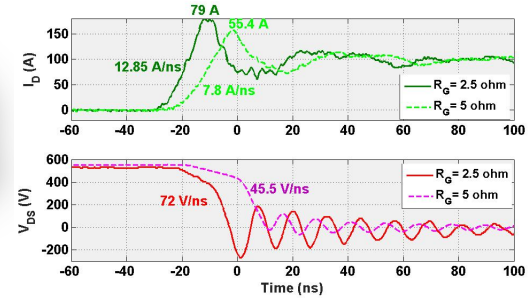

TPOC: Rolando Burgos
Email: rolando@vt.edu
Phone:+1.540.231.0034

SiC-based UPS module and EMI filter strategy for dv/dt > 50 V/ns

WBG Technology Impact

1. Enable use of SiC semiconductors for efficiency and power density improvement in UPS systems.
2. High-efficiency industrial UPS in 0.1-3 MW class
3. Tentative 24 months:
4. Industrial UPS in power range of interest use Si IGBT power modules. An efficiency greater than 97 % will be attainable by proposed SiC-based module. Further, the power density of the UPS modules will be increased by 100 %.

More WBG Impact and Additional impacts

1. UPS system-level cost is expected to drop by 10-20 % based on existent converter development.

2. Higher efficiency compact UPS systems will have the potential to grow market share rapidly

3. Students in the project will have the opportunity to take the new WBG power electronics courses to be developed at Virginia Tech under the newly awarded DOE-sponsored traineeship on WBG power electronics

Argonne National Laboratory

Argonne NATIONAL LABORATORY

Federal Lab

Project Title: 3.2a: Gate Oxide and Body Diode Reliability of SiC Power MOSFETs
Objectives: develop & perform benchmarking
Major Milestones: Develop and validate test circuits, perform tests, catalogue data, perform statistical data analysis, and identify failure mechanisms
Significant Equipment Acquisition: EBIC
Deliverables: project report outlining procedures, conclusions, recommendations

TPOC: Angel Yanguas-Gil
Email: ayg@anl.gov
Phone: 630-252-7353

WBG Technology Impact

1. Develop reliability bench-marking
2. Develop new reliability standards
3. Develop an understanding of the role of defects on a specific reliability mechanisms
4. Establish dedicated third party Reliability Lab for PowerAmerica and WBG industry
5. Develop high-resolution EBIC as a manufacturing tool (future goal)

More WBG Impact and Additional impacts

1. Impact on the cost of WBG compared to Silicon

- Once reliability of WBG devices is demonstrated to be superior to comparable Si devices, if any, market penetration will improve, which will increase production volumes and drive cost down

2. Potential for Job Creation Economic Impact

- Higher production volumes mean more manufacturing jobs as well as higher-paying application development jobs

3. Workforce Development and Education if applicable

- Project will educate students in reliability testing

Arizona State University — Academic member

Project Title: High Performance Solar PV String and Micro Inverters

Objectives: Develop PV string inverters with 98% CEC efficiency and 30W/in^3 and a microinverter with 96% efficiency and 10W/in^3

Major Milestones: Demonstration of target performance metrics on string and micro inverter hardware prototypes

Significant Equipment: 2 GHz oscilloscope

Deliverables: 3 prototypes of string and micro inverters meeting efficiency and power density targets as above

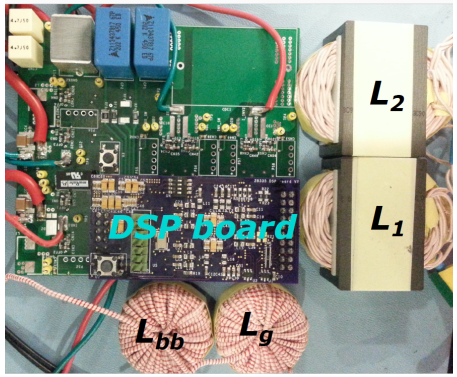

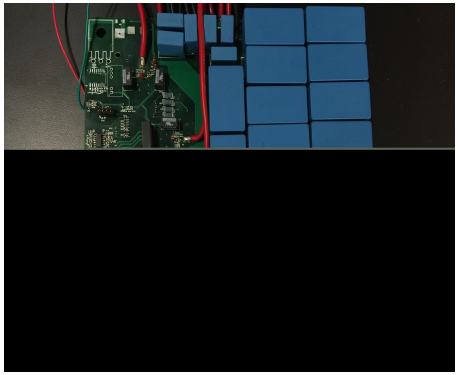

SOPO Task No.: 4.4
TPOC: Raja Ayyanar
Email: rayyanar@asu.edu
Phone: 480.727.7307

WBG Technology Impact

1. Enables 5X increase in switching frequency (>100kHz), and >1% higher efficiency leading to power density improvement by 5X (>10W/in3 in micro, and > 30W/in3 in string inverters)
2. Enables use of high voltage film capacitors (1200V) for 120 Hz power decoupling; develops high frequency magnetics and gate drive solutions
3. Primary market segment impacted is PV string and microinverters, and can be extended to other renewable and transportation applications.

More WBG Impact and Additional impacts

1. Directly supports 1 post doc and 3 PhD students who will potentially be leaders in WBG applications; impacts more than 100 students at ASU through power electronics courses
2. Through Workforce Development and Education task, develops WBG lecture material and several publicly available educational videos on WBG devices and power electronics
3. TRL at project start: 3
   TRL at project completion: 4

Atom Power

Startup Member

Project Title: Mass Market SiC Solid-State Circuit Breaker Development

Objectives: Develop higher amp capacity SiC-based 3-phase circuit breakers for the commercial and industrial building markets

Major Milestones: Scalable, unified architecture for 3-phase circuit breakers up to 480V, 4000A

Significant Equipment Acquisition: High-current injection test kit, High power electronic load

Deliverables: Commercially viable 3-phase, 480VAC, 800A solid-state circuit breaker

TPOC: Ryan Kennedy
Email: rkennedy@atompower.com Phone: 704-687-0454

WBG Technology Impact

1.Atom Power will utilize SiC MOSFET as the core switching technology for commercial/industrial grade circuit breakers. The opportunity for mass market penetration is significant based on the quantity of circuit breakers deployed across the industry.

2.Mass market approach for WBG devices (see above) will secure a significant demand for Atom Power products as well as for the discrete WBG components within our products driving SiC manufacturing costs down.

3.Timeframe for commercialization: full-spectrum delivery and mass-market in mid 2017.

4.The current state of the art for commercial circuit breakers revolves around mechanical switching. Atom Power will deliver reliable, cost competitive SiC circuit breakers.

More WBG Impact and Additional impacts

1. It is the goal of Atom Power to decrease the cost of discrete SiC power MOSFETs based on the significant quantities required for large commercial deployments of our solid-state circuit breakers.

2. Atom Power has a core belief that design, production, and distribution of our products occur within the United States, specifically within our region of North Carolina. We see neighboring component manufacturers as strategic to this ecosystem of sourcing locally, employing locally, and production within our community.

3. Atom Power is significantly involved in funneling talent from the North Carolina university system, specifically with UNCC, into the envelope of Atom Power. That is, most of our employees and new-hires were sourced locally from UNCC and it is our objective to continue this in the future.

Auburn University

Membership Level

Project Title: Development of an open gate dielectric process for SiC MOSFET manufacturing

Objectives: Nitrogen free high stability SiC MOSFETs based on Ultra –high temperature (UHT) oxides and counter doped interfaces

Major Milestones: 1) HT oxide characterization, (2) UHT counter-doped devices, (3) BSG device (4) Strained Ge implanted device (5) Fab run UHT counter-doped DMOSFETs

Deliverables: Oxidation Process, Lateral MOSFETs, Vertical DMOSFETs

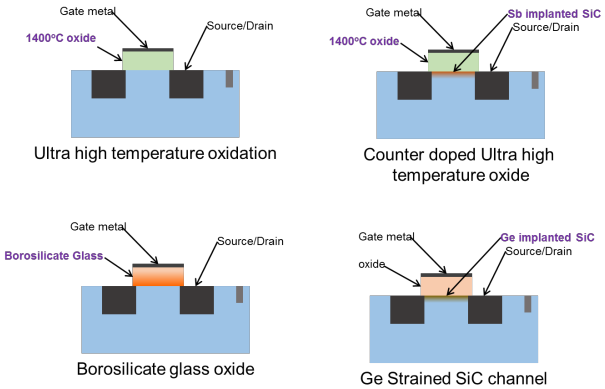

SOPO Task No.: BP2-2.8 CFP28
TPOC: Sarit Dhar
Email: zd0024@auburn.edu
Phone: 334-844-4618

WBG Technology Impact

1. N free oxide foundry compatible process technology for open gate process development.
2. Higher mobility compared to standard SiC devices.
3. Current DMOS have a field effect mobility of ~20 cm^2/Vs. With this new devices values of 60 cm^2/Vs are expected.
4. Increased mobility will open lower voltages (900-600V) markets for SiC
5. Product rated DMOSFETs to be fabricated at the end of year 1 by partner Monolith Semiconductor

More WBG Impact and Additional impacts

1. Impact on the cost of WBG compared to Silicon:

New process will replace expensive NO annealing resulting in lower cost.

2. Workforce Development and Education :

- 2 Undergraduate students trained in semiconductor fabrication and SiC MOS processes
- 1 PhD trained in fabrication and characterization of SiC MOS devices

CoolCAD Electronics Startup

Project Title: Terrestrial Neutron Induced Reliability Concerned in Very High Voltage Silicon Carbide Power Devices

Objectives: Ascertain tolerance of high voltage MOSFETs to Neutron radiation.

Major Milestones: Pre-Radiation Setup and testing; Neutron radiation tests at LANL; Post Radiatiion analysis.

Significant Equipment Acquisition: N/A

Deliverables: Failure in Time Data & Analysis

SOPO Task No.:
DE-EE0006521
TPOC: Name:
Akin Akturk
Email:
akin.akturk@coolcadelectronics.com
Phone:
301-405-3363

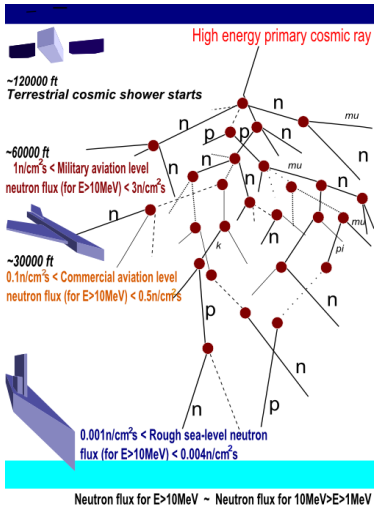

WBG Technology Impact

1. Advances over silicon, or conventional approaches. *SiC is expected to be more neutron adiation resistant than Silicon, but this needs to be quantified.*
2. Market segments impacted. Application Spaces: *Most power especially aerospace.*
3. Timeframe for commercialization: *N/A. This is a reliability test.*
4. Quantitatively describe the state of the art and note how this project will provide a significant advance towards WBG based Power Electronics products. *Understanding and quantifying terrestrial neutron induced reliability effects are important to accelerate the market penetration of SiC power devices.*

More WBG Impact and Additional impacts

1. Terrestrial neutron reliability test will be pursued to quantify terrestrial neutron radiation hardness of SiC MOSFETs. Terrestrial neutron radiation induced effects cause major problems for Si power devices. Quantifying these effects is necessary to ease the way for SiC's adoption in power electronics applications.

2. Potential economic impact is huge. There may be many power circuit manufacturers staying away from SiC due to its unproven reliability effects especially due to terrestrial neutrons. Quantifying this would ease their concerns and enable faster market penetration for SiC.

3. When possible, we will publish our findings.

4. This is a reliability testing service.

JDES

JOHN DEERE

Affiliate Member

Project Title: SiC Inverter for Heavy-Duty Vehicles

Objectives: 200 kW 1050 Vdc WBG Inverter manufacturing and commercialization

Major Milestones: Deployment of SiC dual inverter in 644K Hybrid Loader

Significant Equipment Acquisition: None

Deliverables: SiC dual inverter deployed in JD 644K Hybrid Loader & fuel economy benefits established

TPOC: Dr. Brij N. Singh
Email: SinghBrijN@JohnDeere.com
Phone: (701) 552-8516

WBG Technology Impact

1. Higher DC bus voltage, higher switching frequency, higher junction temp and heat flux, higher kW/L and kW/kg, smaller passives and system level advantages.
2. Heavy-duty off-highway and on-highway vehicles.
3. Commercialization by end of 2019
4. Switching frequency (> 15 kHz with SiC versus 8 kHz with Si). DC bus cap (300 μF - 400 μF with SiC versus 1500μF with silicon). Inverter power density (> 25 kW/L with SiC versus 17 kW/L with silicon)

Additional Impacts of WBG Technology

1. Engine coolant power electronics
2. **WBG tech suitable for innovations by 8C solutions:** copper, capacitor, cable, connector, coolant, case, control, and cost
3. WBG product manufacturing jobs in Fargo
4. WBG power electronics workforce development
   - Summer internship opportunities
   - Co-op student opportunities

4. Current Technology Readiness Level: TRL 3/4

5. Projected TRL at end of project: TRL 6/7

Florida State University

Academic Member

Project Title: 100 kW SiC PV Inverter

Objectives: Demonstrate a transformer-less photovoltaic inverter prototype with efficiency >= 98.5%, power density >= 5 kW/kg (include heatsink and filters), and group leakage current <=300mA.

Major Milestones: power circuit design, thermal stress test, prototype test.

Significant Equipment Acquisition: None.

Deliverables: A SiC PV Inverter hardware to meet all the goals

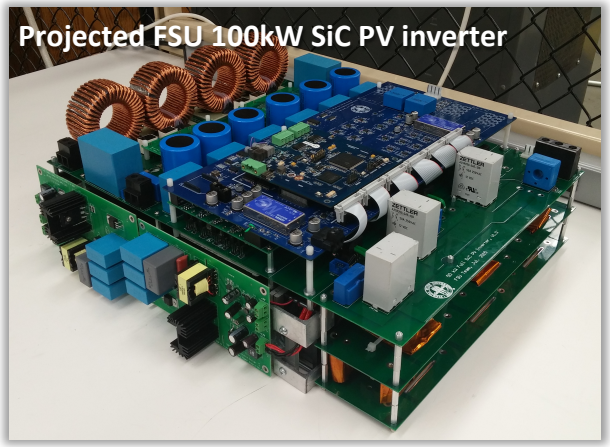

SOPO Task No.: 4.10 TPOC: Dr. Hui "Helen" Li
Email: hli@caps.fsu.edu Phone:850-644-8573

WBG Technology Impact

By employing WBG devices , the 100kW "superstring" PV inverters can reach the power rating of utility level with the efficiency >= 98.5%. The power density of this superstring inverter will be 27 times higher than the state of art Si-based 100kW utility PV inverters. The system cost including manufacturing, installation, maintenance, transportation, and storage will be significantly reduced. And annual energy loss caused by inverter failure will also be reduced, as this type of inverter can be quickly replaced without the need of an electrician.

More WBG Impact and Additional impacts

The developed SiC hardware can be applied to demonstrate the cost benefits of WBG system over the silicon system. The developed technology will increase the US manufacture competition capability and take a lead in the new generation PV inverter markets, which will create more job opportunities in SiC industry and inverter industry.

In addition, this project help educating graduate students and undergraduate students with WBG circuit design and system design training .

TRL level: At project start: TRL 3

Expected at project completion: TRL 4

Project Title: HybMic Converter

Objectives: Commercial prototype development

Major Milestones: 97% overall efficiency

Significant Equipment Acquisition: none

Deliverables: High-frequency hardware prototype

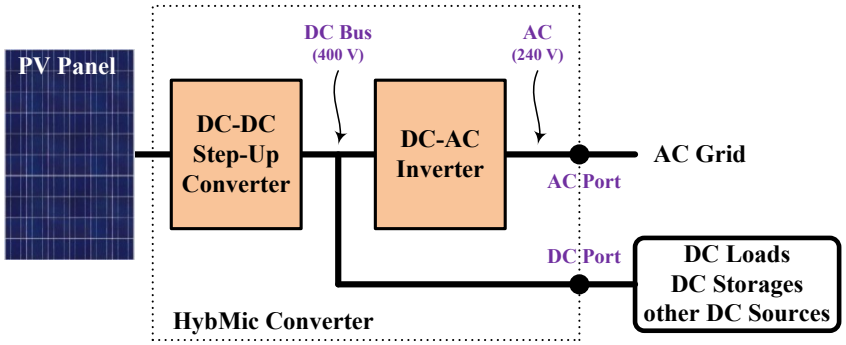

TPOC: Dr. Mehdi Ferdowsi
Email: ferdowsi@innocit.com
Phone: 312-399-7160

WBG Technology Impact

1. Higher switching frequency, Lower conduction losses, Improved overall efficiency.
2. Solar industry, dc microgrid, ac microinverters.
3. Timeframe for commercialization: 3 years
4. The state of the art is not as efficient, compact, and versatile as the proposed HybMic converter.

More WBG Impact and Additional impacts

1. This project proliferates the utilization of WBG devices at lower voltages.
2. Two graduate and two undergraduate students will be involved in the project.
3. Three course modules will be developed.
4. It will put the U.S. on the competitive edge.

Kettering University

Project Title: Comparison of SiC and GaN 7.2 kW Chargers
Objectives: to use SiC devices to build a >97%-efficiency 7.2 kW fast chargers and compare with the previous GaN based charger
Major Milestones: to finish building the charger by Mar, 2017 and finish full-power test by Jun, 2017
Significant Equipment Acquisition: No
Deliverables: 1) a 7.2 kW SiC based charger prototype 2) enhanced 2 power electronics courses and 3) 2~3 short courses.

TPOC: Kevin (Hua) Bai
Email: hbai@kettering.edu
Phone: 810-762-7958

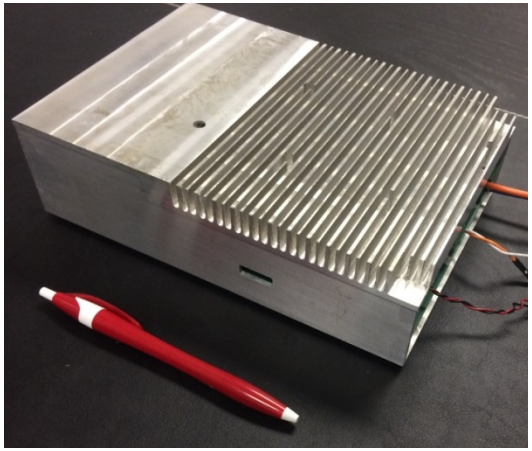

One GaN HEMTs based 7.2 kW charging module (experimental efficiency is ~98%, PF=0.997)

WBG Technology Impact

1.To advance applications of SiC devices over the conventional silicon devices and compare to the approach of using 650V GaN switches.
2.To increase the efficiency and power density of level-2 charger through using SiC devices. We expect >97% efficiency in contrast to most present ~94%, ~4kW/L power density in contrast to ~1 kW/L for existing Si chargers.
3.To generate a systematic methodology of designing WBG power electronics system including magnetics, thermal, gate drivers, packaging and control.

More WBG Impact and Additional impacts

1. This project will expedite the applications of SiC in the electric vehicle industry particularly on-board chargers;
2. We will help EV manufacturers build the pipeline of power electronics expertise in WBG power electronics domain through involving research engineers, graduate and multiple undergraduate students;
3. We will enhance present graduate courses and develop several short courses addressing WBG devices. These course modules will be shared with industrial partners.

Project Title: Development and Deployment of a MV EV Fast Charger

Objectives: Optimize & Deploy MV Fast Charger built in BP1

Major Milestones: Field Demonstration at 50kW at the end of BP2

Significant Equipment Acquisition: None

Deliverables: Deploy 50kW MV Fast Charger

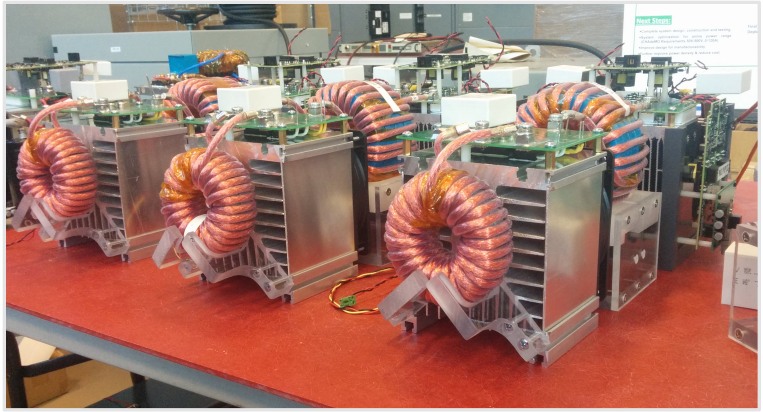

SOPO Task No.: 4.13
TPOC: Srdjan Lukic
Email: smlukic@ncsu.edu
Phone: 919-513-2842

WBG Technology Impact

1. Demonstrate improved power density & efficiency charger with reduced installation cost
2. Isolated MV rectifier has improved power density & efficiency over Si-based systems
3. Impacts transportation & high voltage systems market segments
4. System Demonstration Timeframe: BP2

More WBG Impact and Additional impacts

1. Strong commercialization opportunities exist with Power America industrial partners
2. Undergraduate and graduate students involved through direct support and through Senior design project
3. Graduated Students will form the new WBG workforce experienced in MV applications
4. TRL level at project start: TRL-4;
   Expected at project completion: TRL-7

Project Title: Foundry Process Kit for 1.2kV SiC Power MOSFETs and JBS Rectifiers

Objectives: (1) Manufacturable process for making SiC MOSFETs and JBS Rectifiers.
(2) Development of High Frequency MOSFETs

Major Milestones: Fabrications of 2 Engineering Lots, 3 Process Lots

Significant Equipment Acquisition: None

Deliverables: Statistical data from fabricated SiC devices, Dynamic tests on HF MOSFETs

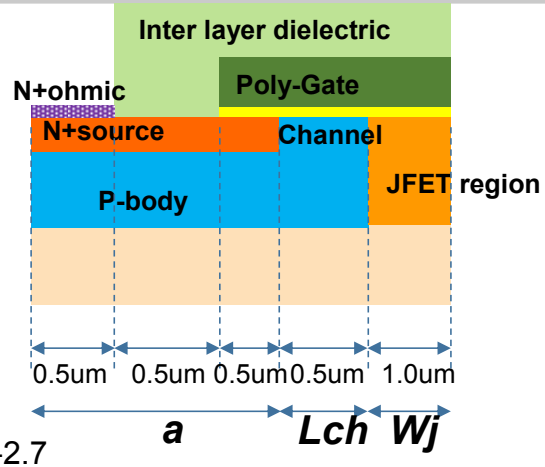

SOPO Task No.: BP-2-2.7
TPOC: Dr. Jay Baliga
Email: bjbaliga@ncsu.edu
Phone: 919-515-6169

WBG Technology Impact

1. Manufacturable process baseline for 1.2kV SiC MOSFETs and JBS rectifiers
2. Application Spaces: EV/HEV, PV Inverter, SMPS, etc
3. Timeframe for commercialization: BP-2
4. This project will create the baseline process for PA members to design their own products and manufacture them at X-Fab. This project will also develop advanced 1.2 kV SiC planar-gate MOSFET structures with superior high frequency figure of merit (FOM).

More WBG Impact and Additional impacts

1. This project aims to increase market penetration for SiC power MOSFETs.

2. Workforce Development : 1 graduate student and two undegraduate students will be involved.

3. TRL level

At project start: TRL7

Expected at project completion: TRL8

North Carolina State University — Academic Partner

Project Title: 100 kW SiC Inverter for Electric Traction Drive
Objectives: Development of an 100 kW EV inverter with WBG semiconductor devices
Major Milestones: Specifications development, gate driver design, passive component sizing & EMI reduction techniques
Significant Equipment Acquisition: N/A
Deliverables: 100kW EV Traction Inverter prototype

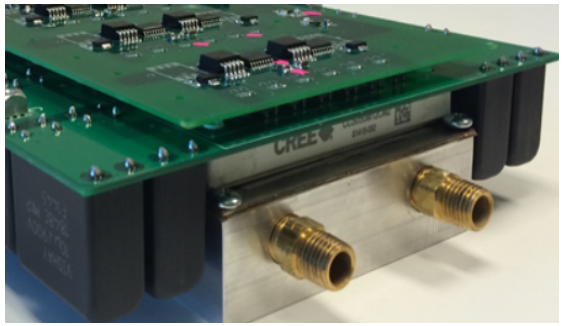

SOPO Task No.: 4.9
TPOC: Iqbal Husain
Email: ihusain2@ncsu.edu
Phone: (919)-513-5927

WBG Technology Impact

1. Establish the viability of WBG inverter for Traction applications in an “Open Source” manner
2. Integrated multi-physics design to provide platform for EV inverter development
3. Improved power density EV inverter compared to Si devices

More WBG Impact and Additional impacts

1. Strong teaming opportunities exist with PowerAmerica automotive and industrial drive partners
2. Establish the starting point of commercialization of a new product line for the automotive industry
3. Skilled workforce development for power electronics and motor drives design

Project Title: Manufacturing, Testing, and Heavy-Duty Vehicle Deployment of 200 kW 1050Vdc SiC Dual-Inverter

Objectives: Thermal management and thermomechanical reliability support

Major Milestone: SiC inverters manufactured with power density, weight, and efficiency targets.

Significant Equipment Acquisition: None

Deliverable: Functional testing of inverter parts and manufacturing

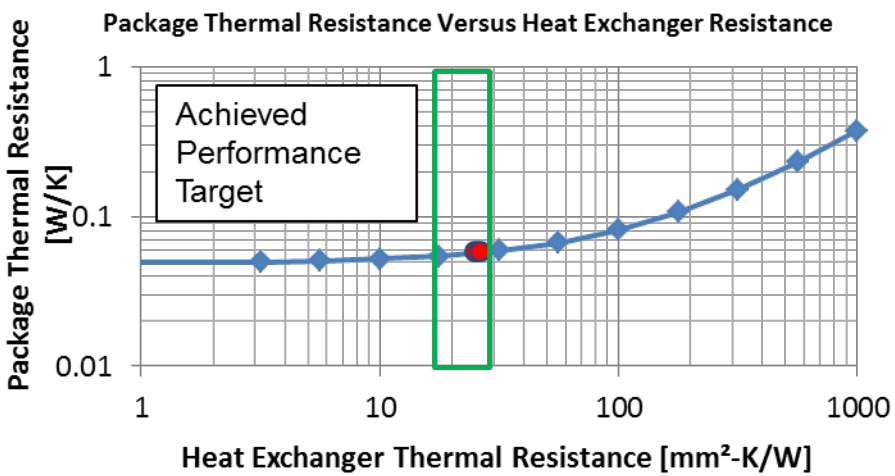

TPOC: Kevin Bennion
Email: kevin.bennion@nrel.gov
Phone: (303)274-4447

WBG Technology Impact

1. Higher temperatures create challenges for component performance and reliability
2. Supports off-highway and on-highway heavy-duty vehicle inverter applications
3. Refer to John Deere Electronic Solutions overall project summary: 200 kW $1050V_{DC}$ $710V_{AC}$ SiC Dual Inverter

Additional Impacts of WBG Technology

1. WBG systems leading to system cost advantages
2. US based design and manufacturing
3. Reliability of high-temperature inverter components
4. WBG thermal and reliability traineeship through internship opportunities
5. TRL level at project start: 3/4
   Expected at project completion: 6/7

Project Title: Manufacture vertical GaN devices on bulk GaN wafers

SOPO Task No.: 2.5

Objectives: Demonstrate 10 A vertical GaN FET with BV > 1200V, R_{on} < 3 mΩ-cm^2

Major Milestones: Develop n- & p-ohmic contacts and thick interconnect or overlay metal processes and fab 1200V/10A FET

Deliverables: 1200V/10A die test data

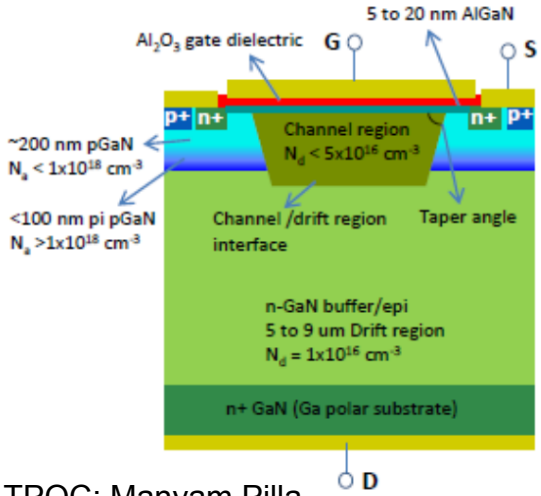

Key improvements:

- 2x Higher Conduction current density
- BV increased to 2200 V
- 3x Reduction in R_{on} to ~0.8 mΩ-cm^2
- 4x reduction in AlGaN thickness for better reliability:
  - reduced stress
  - reduced peak electric fields

TPOC: Manyam Pilla
Email: mpilla@qorvo.com Phone: 972 994 8239

WBG Technology Impact

1. High power: >1200V, >100A operation
2. Market segments impacted: military, aviation, motor drives, & inverters
3. Timeframe for commercialization: Yr 2020 to 2025
4. Leverage GaN's high – breakdown field, carrier mobility & switching speed
5. High manufacturability: 100/150mm wafer scale, target yield > 90%

More WBG Impact and Additional impacts

1. >10X lower cost/Amp of WBG devices and power modules
2. Commercialization of industry led projects & enhance U.S. manufacturing competitiveness
3. Enhance U.S. expertise in WBG power electronics
4. TRL level

At Project start: TRL3

Projected at completion:TRL4

Toshiba International Corporation Affiliate Member

Project Title: SiC Device-based Small Commercial PV inverters
Objectives: Commercialize SiC based small commercial PV inverter
Major Milestones: Year 2: Design and building for the Final Product.
Significant Equipment Acquisition: N/A
Deliverables: Year 2: Design and building for the Final Product.

SOPO Task No.: 4.3
TPOC: Peter Liu
Email: peter.liu@toshiba.com
Phone: (713) 466-0277 x3554

WBG Technology Impact

1. Key CTQ: efficiency, weight and cost
2. WBG device: increase efficiency, reduce system weight and might reduce system cost
3. Commercialize it in 2-3 years.

More WBG Impact and Additional impacts

1. Toshiba International Corporation commit design and manufacture in US
2. Large volume of SiC devices will reduce the cost of Sic devices.

Transphorm Inc.

Membership Level: Affiliate

Project Title: *Modular Open-Source Compact Transformerless Grid-Tied 3kW GaN PV Inverter*

Major Milestones: Open source system design, core power blocks proto (3mo); H/W & F/W integration (6mo); Grid sync & core PV inverter validated (9mo); Beta system tested (12mo)

Significant Equipment Acquisition: <$100K

Deliverables: Open source design of the PV inverter, 2-3 sets of physical layer modules with GaN switches, 1-2 sets of 3 kW PV inverters

Focus Area: 4.2b
TPOC: Rakesh Lal
Email: rlal@transphormusa.com

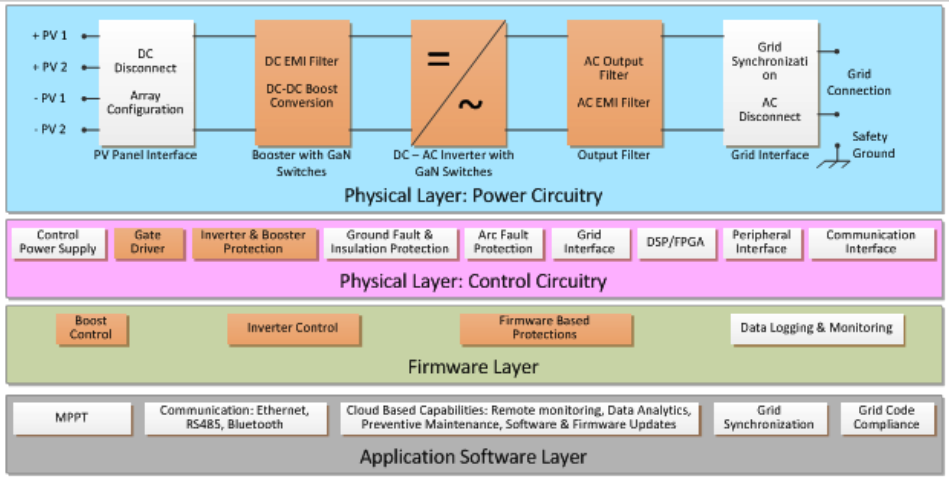

WBG Technology Impact

1. Advances over SOA approaches: High frequency low loss GaN switches enable 50% reduction in size with SMT assembly
2. Market segments impacted: 1-5 kW PV inverters & UPS, and motor drives (with additional software)
3. Timeframe for commercialization: 2017
4. Other: Transphorm's reliable GaN switch technology diode-free platform

More WBG Impact and Additional impacts

1. Impact on the cost of WBG compared to silicon: System cost reduction due to smaller heatsinks, filters, and BoM+diode-free
2. Enables compact, variable frequency PWM
3. Potential for Job Creation: R&D workforce and substantial production in US
4. Workforce Development & Training : WBG-aware engineers through manufacturing and project execution in PV inverter production and installation

Project Title: GaN Power Device : Educa4on and Workforce development

Objectives: Development of a complete documenta4on on fabrica4on of GaN HEMTs (600V–1.1KV)

Major Milestones: NA (please see chapters listed in the concept paper)

Significant Equipment Acquisition: NA

Deliverables: C hapters of the book

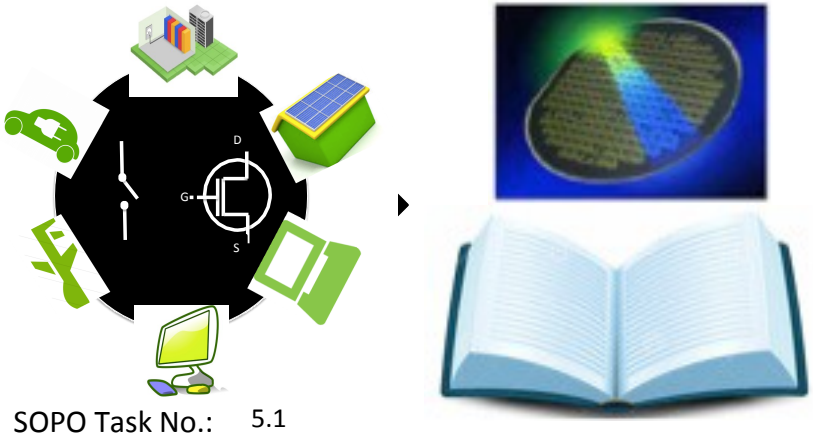

SOPO Task No.: 5.1
TPOC: Sraban4 Chowdhury
Email: chowdhury@ucdavis.edu
Phone: 530---752---9548

WBG Technology Impact

1. AlGaN/GaN HEMTs offer higher efficiency at all frequencies compared to Si, enables higher opera4ng frequency, requires less or "no" cooling unit. Enables new func4onality,
2. Medium Voltage Market (1KW–15KW): Power supplies, Motor Drives, PV inverter, adapters
3. Timeframe for commercializa4on: 5–7 years (with proposed technology)
4. Prolifera4on of 'know–how' will lead to successful fabrica4on of GaN HEMTs in a foundry

Additional Impacts

1. Raise a na4on–wide awareness on GaN technology as demanded by the global market
2. Create engineers skilled to develop GaN devices in their lab
3. Teach "GaN processing" in class

Our MoUo: GaN for all device engineers

North Carolina State University

NC STATE UNIVERSITY

Project Title: Technology Transition Project for SiC Inverter for Electric Vehicle Traction Drive

Objectives: To help transfer TRL/MRL 3-4 SiC EV traction inverter into TRL/MRL 6-7

Major Milestones: Voice of the customer documented, supply chain built, business model completed

Significant Equipment Acquisition: NA

Deliverables: Written report of a practical plan to transitioning SiC EV inverter technology

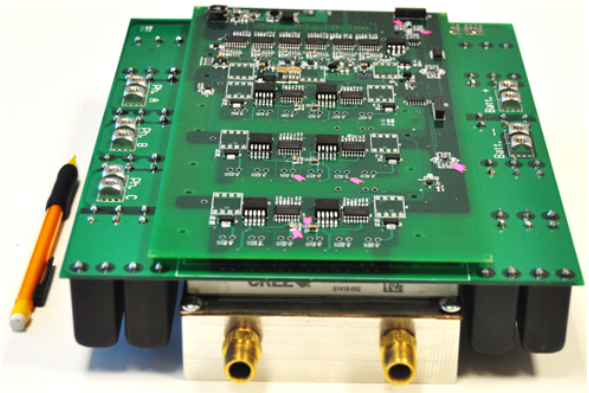

SOPO Task No.: 5.16
TPOC: Iqbal Husain
Email: ihusain2@ncsu.edu
Phone: (919)-513-5927

WBG Technology Impact

1. Establish the cost-effectiveness of SiC inverter for auxiliary drives in vehicle applications
2. Develop SiC EV/HEV inverter from a manufacturing perspective with customer input
3. Address the manufacturing and technology transition issues for SiC EV/HEV inverter product

More WBG Impact and Additional impacts

1. Strong teaming opportunities exist with PowerAmerica automotive and industrial drive partners
2. Establish the commercialization process of 30kW SiC inverter
3. Develop market analysis entrepreneurial skills in graduate students

Lead Institution

Project Title: Technology Transition for the MV EV Fast Charger
Objectives: Develop technology transfer & commercialization strategy for MV rectifiers
Major Milestones: Determine strategy for commercializing MV rectifiers
Significant Equipment Acquisition: None
Deliverables: Report outlining commercialization strategy

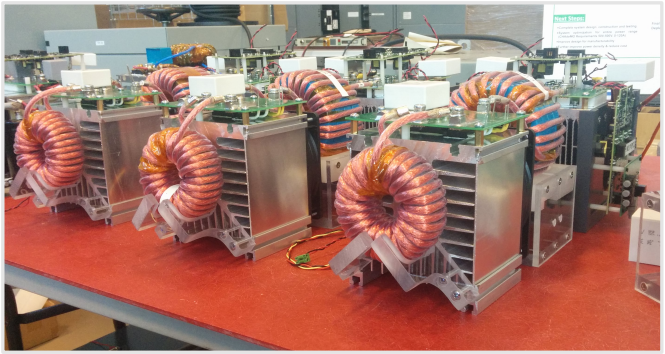

SOPO Task No.: 5.14
TPOC: Srdjan Lukic
Email: smlukic@ncsu.edu
Phone: 919-513-2842

WBG Technology Impact

1. Determine the market size and cost competitiveness of MV SiC rectifiers
2. Impacts transportation & high voltage systems market segments
3. Address the manufacturing and technology transition issues for WBG MV EV Charger and other MV Rectifier applications

More WBG Impact and Additional impacts

1. Establish the commercialization process for MV WBG EV charger and MV WBG rectifiers
2. Undergraduate and graduate students involved through direct support
3. Large interdisciplinary graduate and undergraduate team working collaboratively on understanding WBG technology
4. Graduated Students will form the new WBG workforce experienced in MV applications

Project Title: WBG Workshop Development and Teaching Modules

Objectives: To insert GaN fabrication in a graduate level laboratory course, develop materials for an undergraduate course and workshop

Major Milestones:

- Teach GaN fabrication in a lab course
- Develop educational materials for an undergraduate course
- Develop materials for and teach a fabrication workshop for engineers

Significant Equipment Acquisition:

- Oxford PlasmaLab 100 ICP etcher for GaN etching

Deliverables:

- Teaching and educational materials

- Oxford PlasmaLab 100 ICP etcher for GaN etching

SOPO Task No.:
TPOC: Name
Email:
Phone:

WBG Technology Impact

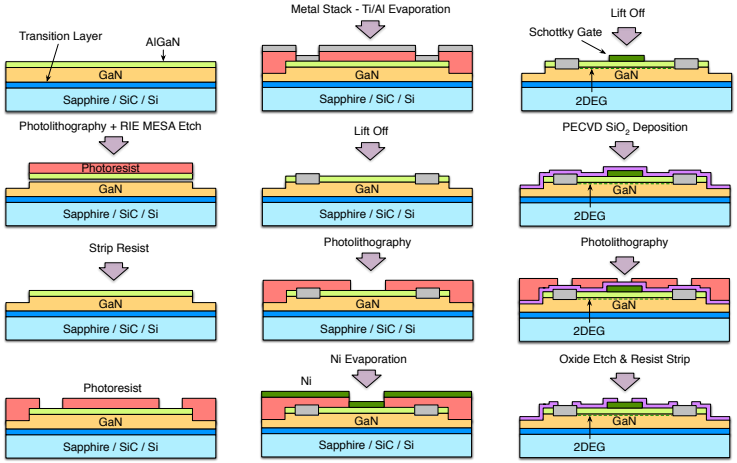

GaN transistors fabricated using the above process sequence are planned to be incorporated in a graduate level, hands-on fabrication course (ECE739) and a hands-on workshop.

More WBG Impact and Additional impacts

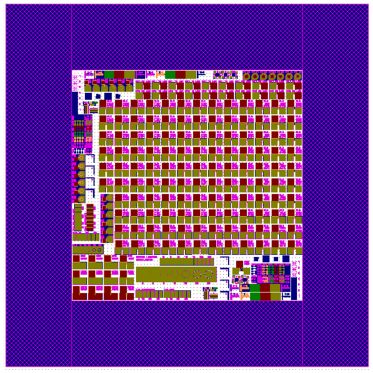

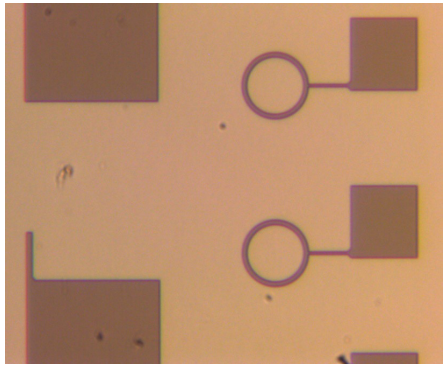

A mask set has been designed for GaN transistor fabrication, ordered and received. This mask will be used in the graduate course to fabricate GaN transistors.

Project Title: **Reliability Benchmarking of GaN Power Devices**

Objectives: Comparative evaluation and reliability analysis of commercial GaN Power HEMTs.

Significant Equipment Acquisition: None

Deliverables: GaN Power HEMT reliability data and comparisons

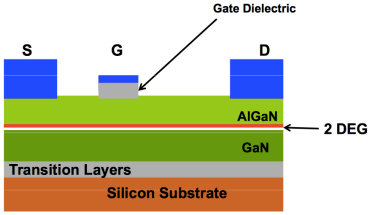

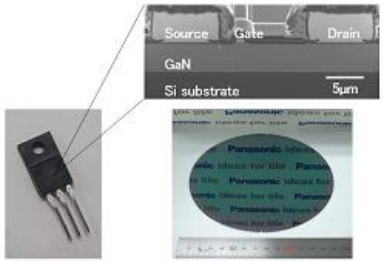

TPOC: Dr. T. Paul Chow
Email: chowt@rpi.edu
Phone: (518) 276-2910

WBG Technology Impact

1. Establish GaN power HEMTs as a viable technology with performance superior to Si counterparts.
2. Low to medium power, discrete and integrated power electronics applications.
3. Timeframe for commercialization: 1-3 years
4. No comparative reliability analysis of commercial GaN power HEMTs has been performed. Our proposed project would be the first.

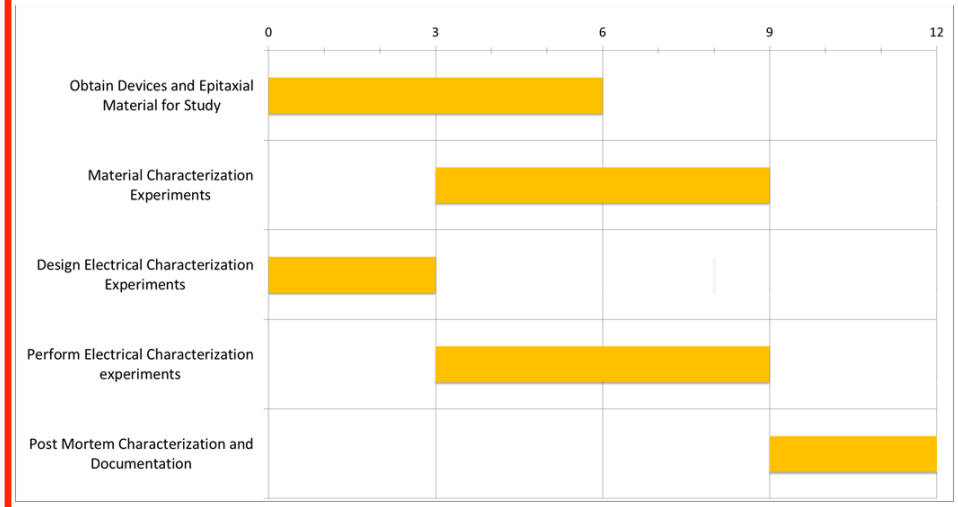

Wolfspeed
A CREE COMPANY

Full Member

Project Title: **HTRB of 3.3kV/10kV SiC MOSFET & 10kV SiC JBS Diode & 3.3kV SiC Module**

Objectives: **Establish Manufacturable Fab Process & HTRB Qualification of 3.3kV/10kV SiC MOSFET & 10kV SiC JBS Diode & Demo 3.3kV SiC Module**

Major Milestones: **Complete HTRB Qualification of 3.3kV/10kV SiC MOSFET & Demo 3.3kV SiC Module**

Significant Equipment Acquisition:

Establish 3.3kV/10kV SiC Device HTRB Test Capability

Deliverables: **3.3kV & 10kV SiC MOSFETs, 10kV SiC JBS Diodes, 3.3kV SiC Modules, Datasheets, HTRB Test Results**

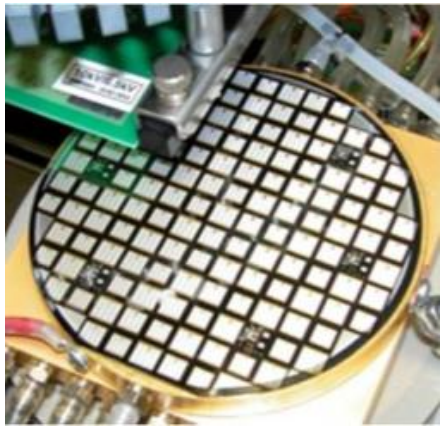

10 kV/350 mΩ SiC MOSFETs Fabricated & Tested On 100 mm 4HN-SiC Wafer

SOPO Task No.: **2.3**
TPOC: **David Grider**
Email: **david_grider@cree.com**
Phone: **(919) 407-5345**

WBG Technology Impact

1. **3.3 kV & 10 kV SiC MOSFET Technology Provides Improved Efficiency & Increased Switching Frequency for Medium Voltage Power Applications**
2. **Potential Applications: MV Motor Drive, UPS, Data Center Rail Traction, Solar Inverter, EV Charger, Grid-HVDC/SST**
3. **Commercialization Timeframe: ~ 2 years**
4. **Establish Manufacturable Fabrication Process & Complete HTRB Qualification ⇒ <u>Critical Transition for Commercial Production of 3.3kV/10kV SiC Power Technology</u> for Improved Efficiency & Higher Switching Frequency for MV Power Applications**

Additional Impacts

1. **Considerations for Cost of 3.3kV/10kV SiC Power Technology Compared to 3.3kV/6.5kV Si Power Technology**
   - **Reduced Balance of System Costs Resulting in Lower Total System Costs**
   - **Reduced System Size/Weight**
   - **Simplified/Reduced Cooling Requirements**
   - **Reduced Cosmic Radiation Sensitivity Enabling Higher Voltage Operation**
2. **Leading 3.3kV/10kV SiC Power Technology**
   ⇒ Early Supplier For MV Power Systems
   ⇒ Address ~ $800M/Yr MV Power Market

Wolfspeed
A CREE COMPANY

Full Member

Project Title: **HTGB, TS, Body Diode, ESD, H3TRB, & TDDB Qualification of 3.3kV & 10kV SiC MOSFETs**

Objectives: **HTGB, Thermal Shock, Body Diode HTOL, ESD, H3TRB, & TDDB Qualification of 3.3kV/40mOhm & 10kV/350mOhm SiC MOSFETs**

Major Milestones: **Complete HTGB, TS, Body Diode HTOL, ESD, H3TRB, & TDDB Qual of 3.3kV/40mOhm & 10kV/350mOhm SiC MOSFETs**

Significant Equipment Acquisition:

Establish 3.3kV/10kV SiC MOSFET H3TRB and Body Diode HTOL Test Capability

Deliverables: **3.3kV & 10kV SiC MOSFETs, Datasheets, HTGB, Thermal Shock, Body Diode HTOL, ESD, H3TRB, & TDDB Test Results**

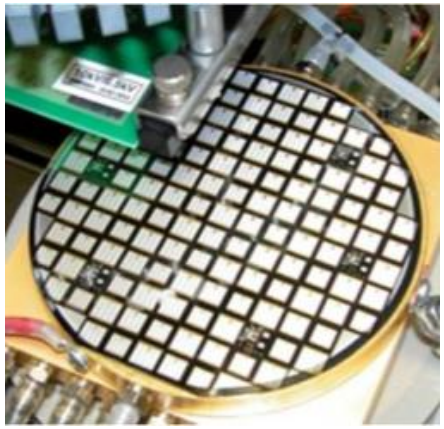

10kV/350mΩ SiC MOSFETs Fabricated &Tested On 100 mm 4HN-SiC Wafer

SOPO Task No.: **BP2-2.3**
TPOC: **David Grider**
Email: **david_grider@cree.com**
Phone: **(919) 407-5345**

WBG Technology Impact

1. **3.3 kV & 10 kV SiC MOSFET Technology Provides Improved Efficiency & Increased Switching Frequency for Medium Voltage Power Applications**
2. **Potential Applications: MV Motor Drive, UPS, Data Center Rail Traction, Solar Inverter, EV Charger, Grid-HVDC/SST**
3. **Commercialization Timeframe: ~ 2 years**
4. **Establish Manufacturable Fabrication Process & Complete HTRB Qualification ⇒ <u>Critical Transition for Commercial Production of 3.3kV/10kV SiC Power Technology</u> for Improved Efficiency & Higher Switching Frequency for MV Power Applications**

Additional Impacts

1. **Considerations for Cost of 3.3kV/10kV SiC Power Technology Compared to 3.3kV/6.5kV Si Power Technology**
   - **Reduced Balance of System Costs Resulting in Lower Total System Costs**
   - **Reduced System Size/Weight**
   - **Simplified/Reduced Cooling Requirements**
   - **Reduced Cosmic Radiation Sensitivity Enabling Higher Voltage Operation**
2. **Leading 3.3kV/10kV SiC Power Technology**
   ⇒ Early Supplier For MV Power Systems
   ⇒ Address ~ $800M/Yr MV Power Market

Project Title: **Ultra-High Efficiency SiC Modular UPS**

Objectives: To develop and demonstrate the next generation UPS DPA500 (hybrid and full SiC)

Major Milestones: 100 kW SiC UPS DPA500 module hardware tested

Significant Equipment Acquisition: None

Deliverables: 100 kW SiC UPS module & qualification test results, sales & mfg reports

SOPO Task No.: 4.2
TPOC: VR Ramanan
Email: vr.v.ramanan@us.abb.com
Phone: 919-601-5420

WBG Technology Impact

1. Greatly boost the **system efficiency by up to 2-3%** compared to Si UPS modules, while maintaining a competitive cost through extensive system optimization
2. Market segments impacted: UPS for datacenters
3. Timeframe for commercialization: 1 year after completion of the project for the hybrid Si/SiC UPS solution & 2-3 years for the full SiC solution
4. Improved efficiency and reduced system costs due to higher frequency operation and reduced cooling requirements

More WBG Impact and Additional impacts

1. The successful execution of the proposed project will foster growth of UPS product portfolio with innovative modular products for the US and global markets

2. Address a clear market pull for high efficiency UPS modular systems in datacenters

3. The project will be run in close cooperation between the ABB Corporate Research Center and ABB's North American UPS facility → clear path to commercialization

4. The proposed project will provide ABB power engineers with opportunity to learn and experience designing and manufacturing Wide Bandgap-based UPS components and systems

Project Title: High power density DC-DC converter for auxiliary power in heavy-duty vehicle applications
Objectives: Commercialization of bi-directional isolated converter abiding relevant industry standards
Major Milestones: Gate driver design, HF transformer design, thermal design, prototype
Deliverables: Prototype system adhering to prevalent industry standards

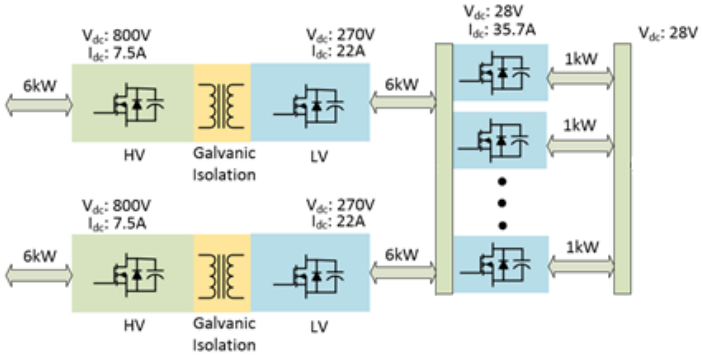

SOPO Task No.:
TPOC: Dr. Subhashish Bhattacharya
Email:sbhatta4@ncsu.edu
Phone: +1-919-744-1428

WBG Technology Impact

1. Increased power density; high temperature operation.
2. Automotive applications
3. No commercial product available which can operate at 105^0C ambient and with power density of 5kW/l

More WBG Impact and Additional impacts

1. Higher allowable junction temperature means higher reliability compared to Si

2. Reduction in cooling requirements. Use of engine cooling loop to extract heat from power electronics.

3. 1 Ph.D. and 1 M.S. student. Exploring possibilities to involve 1 U.G. student

4. **TRL level**

At project start: 3

Expected at project completion: 5

GeneSiC Semiconductor Inc.

Project Title: Transfer of 1.2 kV diode process to a 150 mm Foundry line for Commercialization

Objectives: Achieve state-of-the-art performing SiC Schottky diodes at X-Fab

Major Milestones: Achieve low leakage current; low on-resistance, on 1200 V SiC Schottky Diodes

Significant Equipment Acquisition: N/A

Deliverables: 1200 V SiC Rectifiers on 150 mm SiC wafers

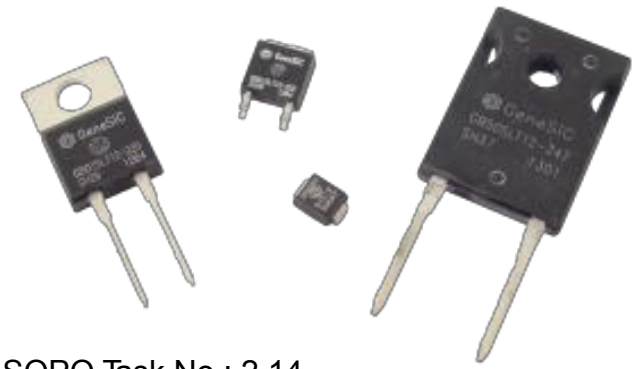

SOPO Task No.: 2.14
TPOC: Ranbir Singh
Email:
ranbir.singh@genesicsemi.com
Phone: 703-996-8200

SiC Schottky Rectifiers Impact

1. GeneSiC offers SiC devices with well known performance advantages over Si and other SiC counterparts.
2. Applications: UPS Inverters, Power Supplies, Chargers, Motor Drives, Automotive
3. Key Outputs: Qualified 1200 V SiC Schottky Recitiers
4. GeneSiC will commercialize the widest range of SiC offerings, capitalizing on the 150 mm foundry model to advance the technology at lower cost.

More WBG Impact and Additional impacts

1. Switching and robustness of GeneSiC's SiC Schottky rectifiers are 5-10X superior to best-in-class Si devices
2. All GeneSiC employees are US-based. The company continues to grow and hire additional personnel with little prior WBG experience, train them in the area of WBG, as it has done in the past.
3. GeneSiC will continue to host graduate and undergraduate level interns as it has done over past 12 years.

MONOLITH SEMICONDUCTOR INC.

Start-up Member

Project Title: 1.2kV Diode Commercialization and Production

Objectives: Commercialization of 1.2kV SiC diodes at X-Fab Texas

Major Milestones: Availability of diode engineering samples manufactured at X-Fab

Significant Equipment Acquisition: None

Deliverables: Engineering samples to partners

SOPO Task No.: Task 2.4

TPOC: Kiran Chatty

Email: kchatty@monolithsemi.com
Phone: 802-238-4163

& ' (%5$-6 / "3"78%) * + , - .

1. Reliable, low-loss SiC switches and diodes manufactured in high volume fab at low cost.
2. Applications : Solar inverters, motor drives, power supplies, automotive.
3. Timeframe for commercialization: 2016

! "#$%% & ' (%) * + , - .%%, / 0%100 2.2" / , 3%2 * + , - .4

1. Current SiC switches and diodes are >5x expensive compared to silicon, Monolith's HV switches will enable cost within 1.5-2x of silicon, can reach cost parity.

2. Create semiconductor manufacturing jobs in US.

X-FAB Texas, Inc. Membership Level: Full

Project Title:

- SiC Device Foundry Development

Objectives:

- Reduce cost of SiC wafer processing

Major Milestones:

- Equip installed, qual'd, PIK (M12)

Significant Equipment Acquisition:

- High Temp Implanter, Temp Bond/Debond

Deliverables:

- Qual reports, Generic Unit Process

MIXED-SIGNAL FOUNDRY EXPERTS

TPOC: John Ransom
Email: john.ransom@xfab.com
Phone: +1.806.747.4400 ext 2460

WBG Technology Impact

1. All production SiC devices today are produced on 4" wafers, mostly in captive fabs. Leveraging the area of 6" wafers, along with the aggregated volumes of multiple device partners can allow competition with Si.
2. Timeframe for commercialization: 2Q 2017
3. Cost structure of a large 6" Si foundry has the potential to drive device cost to < $0.10/amp for 600V devices and <$0.30/amp for 1200V devices

More WBG Impact and Additional impacts

Since 2001 60+ fabs in the U.S. have discontinued operations. PowerAmerica offers a business continuity model that can be adopted by other facilities that are no longer competitive in Si.

Project Title: GaN Power Device : Education and Workforce development

Objectives: Development of a complete documentation on fabrication of GaN HEMTs (600V—1.1KV)

Major Milestones: NA (please see chapters listed in the concept paper)

Significant Equipment Acquisition: NA

Deliverables: Chapters of the book

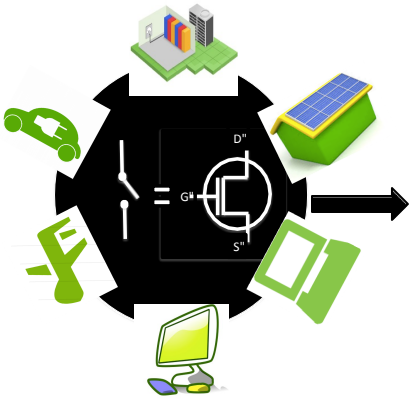

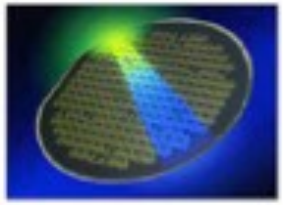

SOPO Task No.: 5.1
TPOC: Srabanti Chowdhury
Email: chowdhury@ucdavis.edu
Phone: 530---752---9548

WBG Technology Impact

1. AlGaN/GaN HEMTs offer higher efficiency at all frequencies compared to Si, enables higher operating frequency, requires less or "no" cooling unit. Enables new func4onality,
2. Medium Voltage Market (1KW—15KW): Power supplies, Motor Drives, PV inverter, adapters
3. Timeframe for commercializa4on: 5-7 years (with proposed technology)
4. Prolifera4on of 'know—how' will lead to successful fabrica4on of GaN HEMTs in a foundry

Additional Impacts

1. Raise a nation—wide awareness on GaN technology as demanded by the global market
2. Create engineers skilled to develop GaN devices in their lab
3. Teach "GaN processing" in class

Our MoUo: GaN for all device engineers

Project Title: N-Polar GaN Power Devices

Objectives: Develop N-polar MISHEMT technology with high breakdown, low gate leakage and low sheet resistance & develop foundry transferable process

Major Milestones: D-mode HEMT with V_{BR}> 600 V, R_{SH} < 300 Ω/sq, I_G ~ 0.1 mA/cm²

Significant Equipment Acquisition: N/A

Deliverables: Process flow and device

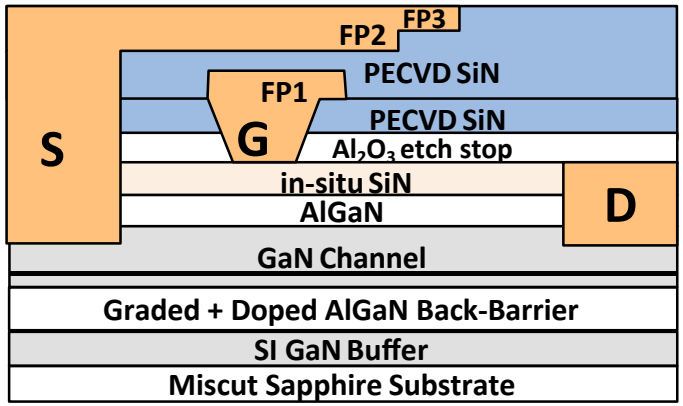

SOPO Task No.: 2.9
TPOC: Umesh K. Mishra
Email: mishra@ece.ucsb.edu
Phone: (805) 893-3586

WBG Technology Impact

1. AlGaN/GaN HEMTs offer higher efficiency at all frequencies compared to Si, enables higher operating frequency , requires less or "no" cooling unit. Enables new functionality,
2. Medium Voltage Market (1KW-15KW): Power supplies, Motor Drives, PV inverter, adapters
3. Timeframe for commercialization: 4-5 years (with proposed technology)
4. Pathway to better dielectrics for both D-mode and ultimately E-mode devices

More WBG Impact and Additional impacts

1.Lower system cost predicted: reduced passives and cooling
2.Require "new skills" at all levels: Materials, Device, Circuits and Systems
3. Help establish the new power conversion platform beyond Si

Project Title: **DC Data Center with High Frequency Isolation**

Objectives: Develop a SiC based cascade high frequency (500kHz) isolated converter with bi-directional power flow capability

Major Milestones: High frequency DC/DC transformer with loss less than 1% of total output power;
500 kHz 15-20kW isolated converter with 98% peak efficiency

Deliverables: A modular building block with 500 kHz frequency and 98% peak efficiency

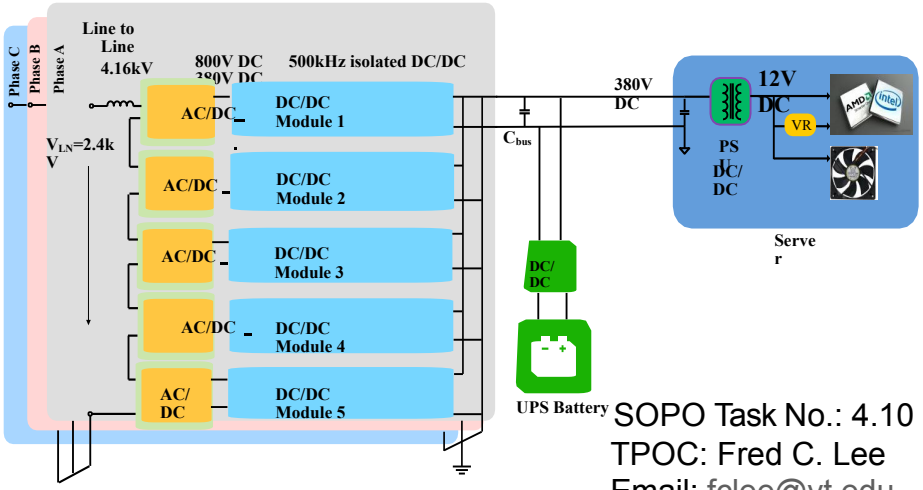

SOPO Task No.: 4.10
TPOC: Fred C. Lee
Email: fclee@vt.edu
Phone: 540-231-7716

WBG Technology Impact

Due to the increasing use of cloud computing and bag data, the power consumption of data center alone will reach 10% of the total electrical power consumption in the world by 2020. The current AC data center power architecture has too many stages, which cause excessive power loss in power distribution. Many companies are actively pursuing DC data center, which is much simplified and more efficient. In DC Data Center, MVAC (4.16 and 13.8kVAC) is normally step down to LVDC (380 VDC) through a line frequency transformer and AC/DC stage. However, the line frequency transformer is too bulk and not scalable.

In this proposed work, we will develop cascade high frequency isolated converter based on SiC MOSFET to replace line frequency transformer to directly step down MVAC to LVDC. The proposed system is modular and easily scalable, and have much higher power density. The proposed system will operate at 500kHz, which is which is 25X higher than state-of-the-arts.

More WBG Impact and Additional impacts

The proposed cascade high frequency isolated converter is basically a power conditioning system block (PCSB) with bi-directional power flow capability. Its applications is not only limited to DC data center. It can be used for a broad range of microgrids of different scale.